TRUMPF

N 200	PN 200	PN 201		
1751743	1751836	1751841	TruTool N 200 (2A1)	D 230V 50/60Hz
1751806	1751837	1751843	TruTool PN 200 (2A1)	CH 230V 50/60Hz
1751805	1751839	1751846		GB 110V 50Hz
1751777	1751838	1751845	TruTool PN 201 (2A1)	USA 120V 50/60Hz
1751807	1751840	1751847		J 100V 50/60Hz

NO	订货号 NO. D'ORDINE NO. DE REF. NO. DE REF. ORDER. NO. BEST.-NR.	备件 PEZZO DI RICAMBIO PIEZA DE RECAMBIO PIECE DE RECHANGE SPARE PART ERSATZTEIL	
1	1750696		
2	0089021	DIN 625-629-2RSR	
3	1750557	DIN 618-BK0709	
4	0751869	ISO 8734-3m6x14-A-ST	
5	1749945		
10	0120068	DIN 988-10x16x0.5	
11	1750552		
12	1788497		
13	1750229		
14	1741257		
15	1750248		
16	1753670		
17	1746620		
18	1750237		
19	1803986	DIN 6799-4	
20	1750694		
21	0944506		
22	1750271		
23	0945692		
24	0090799	ISO 7380-1-M4x 10-A2F-08.8	
25	0966729		
26	0966453		
27	0980335		
30	1750693		
31	0945691		
32	1750276		
33	0945697		
34	0948711		
35	1412154		
40	1750692		
41	1751195		
42	0945695		
50	1757316	D 230V 50/60Hz	
	1800988	CH 230V 50/60Hz	
	1800989	GB 110V 50Hz	
	1755296	USA 120V 60Hz	
	1800990	J 100V 50/60Hz	
51	0803235	DIN 618-BK1210	
52	1750699		
60	1750240		

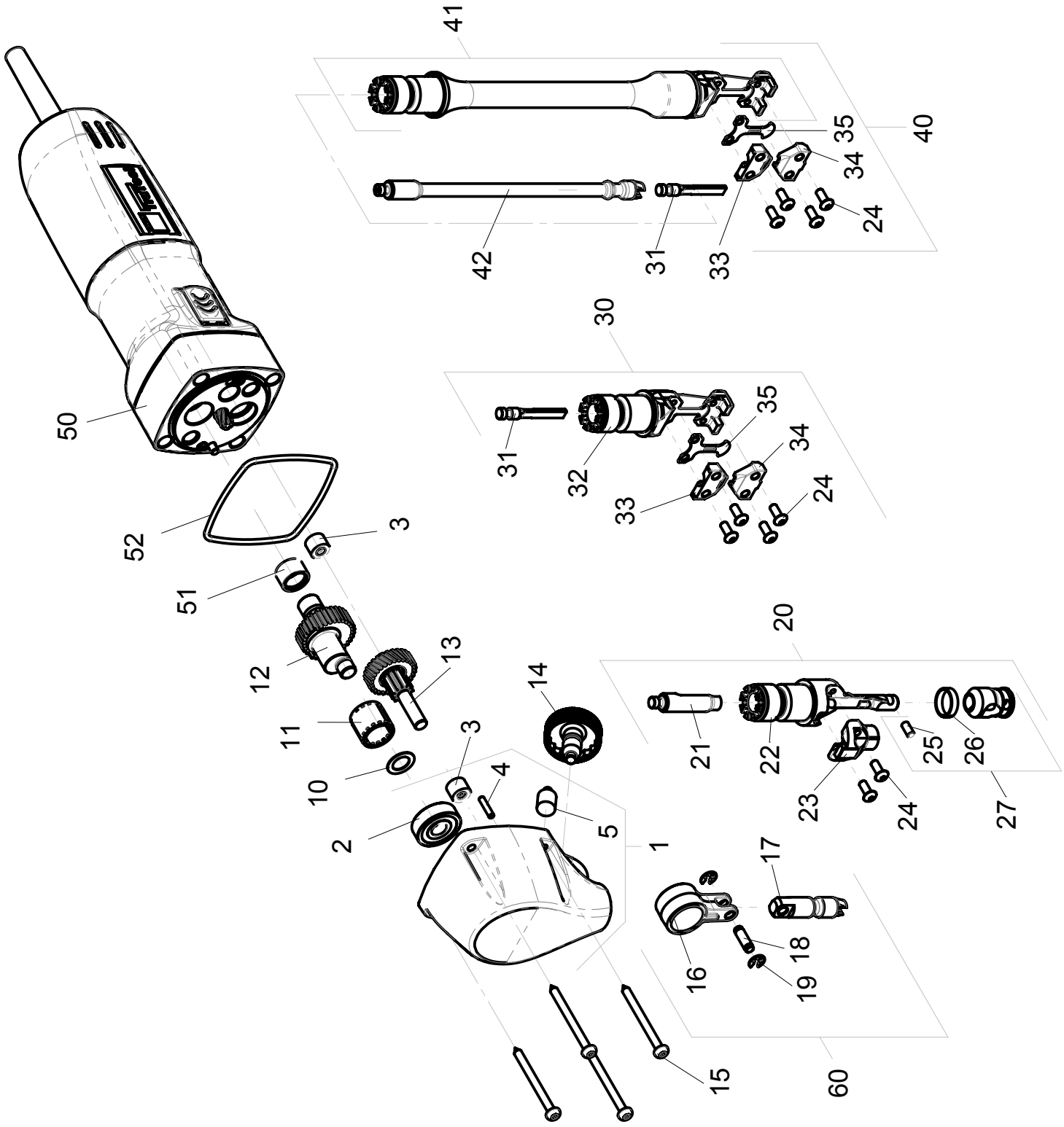
41
40
35
34
24
42
31
33
30
35
34
31
32
33
24
50
52
3
51
20
12
13
14
11
3
21
22
25
26
10
4
23
24
27
2
5
1
17
18
16
19
15
60