TRUMPF

1800990	**Motor** ACC 500	J 100V 50/60Hz
1755296		USA 120V 50/60Hz
1800989		GB 110V 50Hz
1800988		CH 230V 50/60Hz
1757316		D 230V 50/60Hz
2007332		CN 220V 50Hz

	订货号	备件
	No. D'ORDINE	PEZZO DI RICAMBIO
	NO. DE REF.	PIEZA DE RECAMBIO
	NO. DE REF.	PIECE DE RECHANGE
	ORDER NO.	SPARE PART
NO	BEST.-NR.	ERSATZTEIL
500	1813666	220-230V
	1813672	100-120V
501	1813664	
502	0029676	
503	1813671	
504	0101405	D 230V 50/60Hz
	0033236	CH 230V 50/60Hz
	0144869	GB 110V 50Hz
	0054266	USA 120V 50/60Hz
	0365624	J 100V 50/60Hz
	1641461	CN 220V 50Hz
505	1813674	
506	1813661	100-230V
507	1813665	
508	1813560	
509	0010073	
510	1751873	
511	1821572	
512	1821571	
513	1821460	
514	1821854	

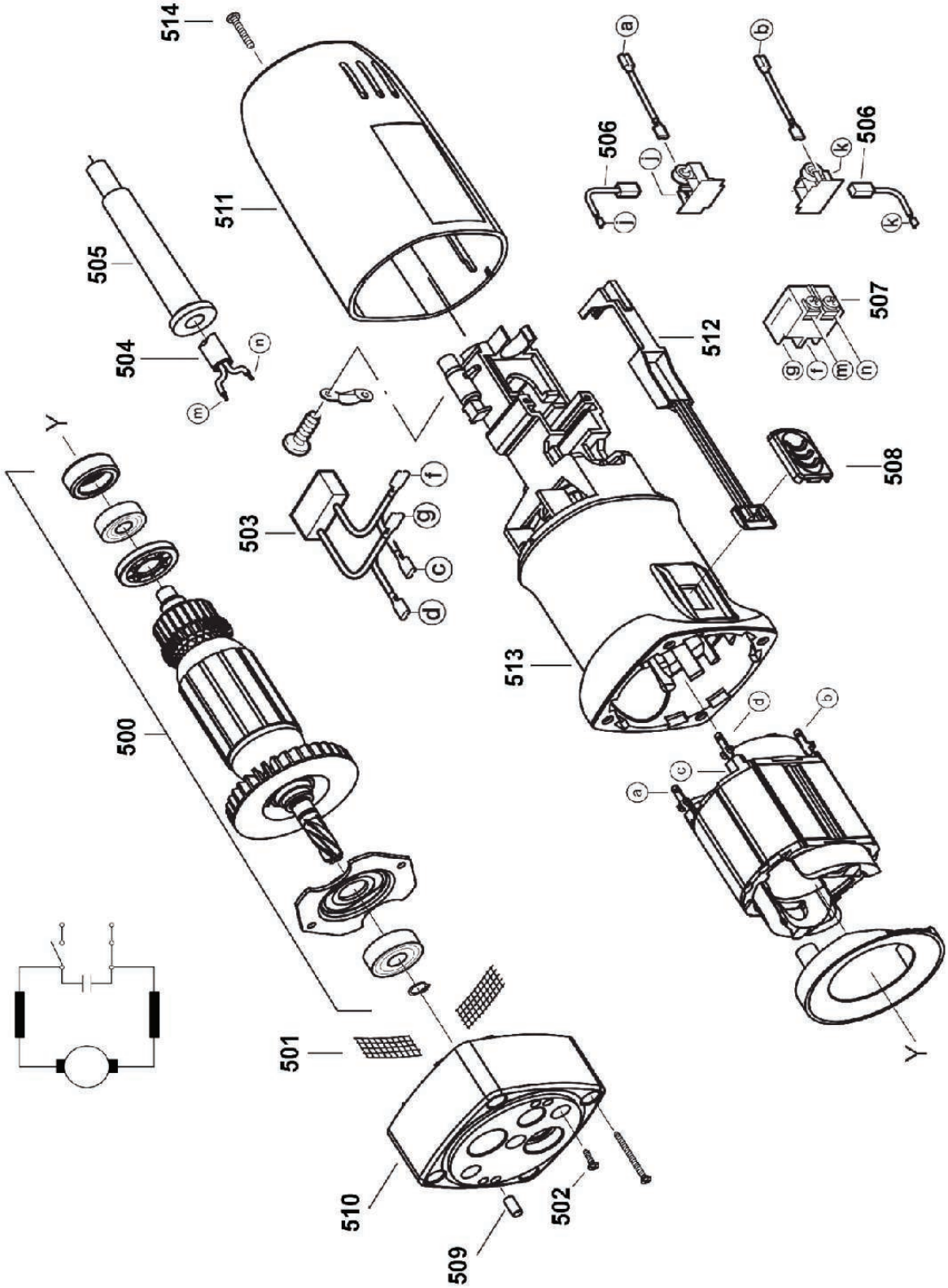
514
511
505
504
n
m
Y
500
501
510
509
502
506
a
l
b
k
507
g
f
m
n
512
508
503
f
g
c
d
513
d
b
c
a
Y