TRUMPF

| | | |
|---|---|---|
| **1800990** | **Motor**<br>ACC 500 | J 100V 50/60Hz |
| **1755296** | | USA 120V 50/60Hz |
| **1800989** | | GB 110V 50Hz |
| **1800988** | | CH 230V 50/60Hz |
| **1757316** | | D 230V 50/60Hz |
| **2007332** | | CN 220V 50Hz |

| | 订货号 | 备件 |
|---|---|---|
| | No. D'ORDINE | PEZZO DI RICAMBIO |
| | NO. DE REF. | PIEZA DE RECAMBIO |
| | NO. DE REF. | PIECE DE RECHANGE |
| | ORDER NO. | SPARE PART |
| NO | BEST.-NR. | ERSATZTEIL |
| 500 | 1813666 | 220-230V |
| | 1813672 | 100-120V |
| 501 | 1813664 | |
| 502 | 0029676 | |
| 503 | 1813671 | |
| 504 | 0101405 | D 230V 50/60Hz |
| | 0033236 | CH 230V 50/60Hz |
| | 0144869 | GB 110V 50Hz |
| | 0054266 | USA 120V 50/60Hz |
| | 0365624 | J 100V 50/60Hz |
| | 1641461 | CN 220V 50Hz |
| 505 | 1813674 | |
| 506 | 1813661 | 100-230V |
| 507 | 1813665 | |
| 508 | 1813560 | |
| 509 | 0010073 | |
| 510 | 1751873 | |
| 511 | 1821572 | |
| 512 | 1821571 | |
| 513 | 1821460 | |
| 514 | 1821854 | |

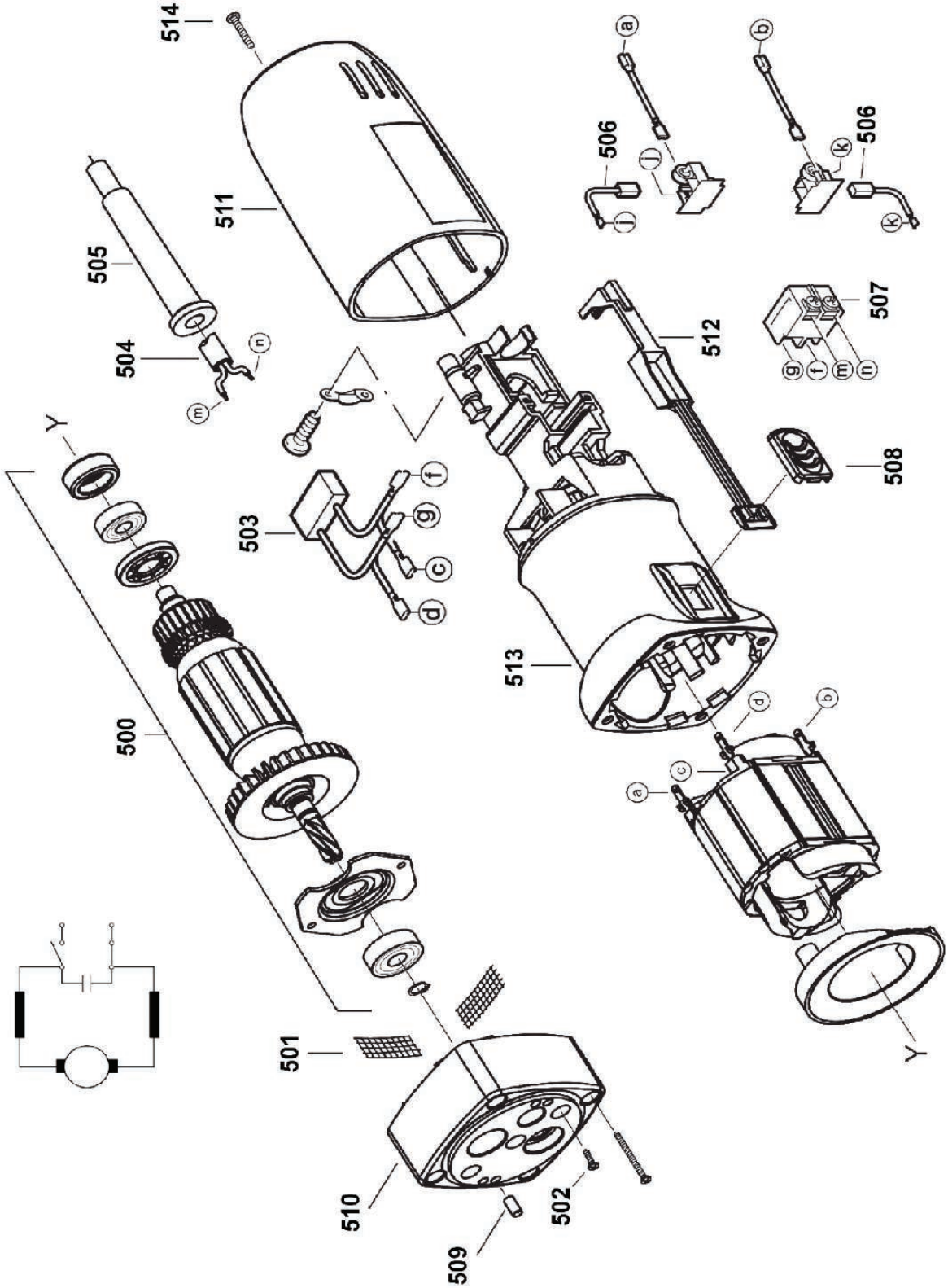
514
511
505
504
n
m
Y
500
501
510
509
502
506
a
l
b
k
507
g
f
m
n
512
508
503
f
g
c
d
513
d
b
c
a
Y